Symmetrical Horn SH-TP 5-70



Kode : SH-TP 5-70
Brand : RF elements
Jenis : Wireless Antenna
Harga : Rp 1.100.000,00
~~Rp 1.575.000,00~~

Symmetrical Sectors are scalar horn antennas with symmetrical beam radiation pattern and industry changing TwistPortTM connector. Symmetrical Sectors offer perfect blend of features that solve the major weak points of current mainstream Sector antenna technology.

Paket ini hanya Antenna only, Tidak termasuk Routerboard dan Box Enclosure

Penawaran Harga Spesial
08112039555

Supported Adaptor & Enclosure :

- **TP-ADAPTOR-RB**
- **TP-ADAPTOR-RB-S**
- **TP-ADAPTOR-EPMP**
- **TP-ADAPTOR-R5AC**
- **TP-ADAPTOR-R5AC-S**
- **TP-ADAPTOR-R5AC-PTP**
- **TP-ADAPTOR-RM5**

www.citraweb.com

Symmetrical Horn SH-TP 5-70

Traditional Sector antennas radiate very wide but very flat beam, with plenty of unwanted side lobes, that even change with frequency. Such beam performance is source to low noise immunity, co-location interference and null fill issues.

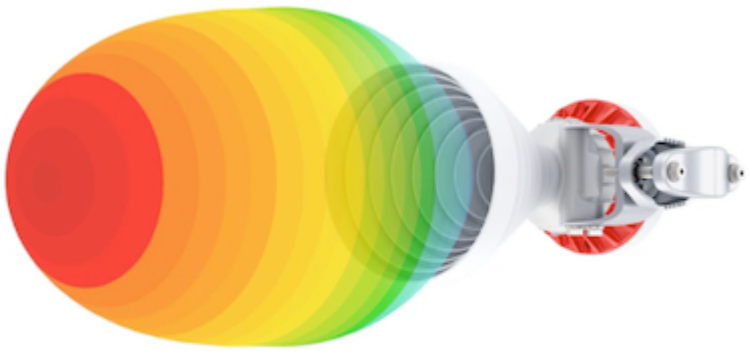

5.8 GHz



Symmetrical Sectors are low loss scalar horn antennas with unique beam shape and characteristics. Their beam section is circular: azimuth and elevation radiation angles are identical. The beam pattern does not vary with frequency and antenna gain is balanced over a wide frequency range. These features make them excellent for use as Sector antennas.



Download Installation Guide

Content :
- SH-TP 5-70 Body 1x
- SH-TP 5-70 Bracket 1x
- M8 x 42,5mm Screw 2x
- M8 x 73,5mm Screw 2x

www.citraweb.com

CITRAWEB SOLUSI TEKNOLOGI
www.citraweb.com
info@citraweb.com
sales@citraweb.com

- 2,9 x 16 mm lock Screw 1x

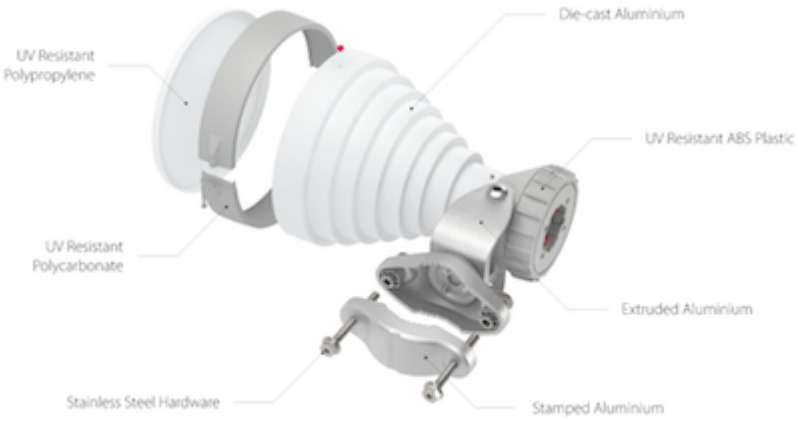

TECHNICAL DATA	
Antenna Connection	: TwistPort™ - Quick Locking Waveguide Port
Antenna Type	: Horn
Materials	: UV Resistant ABS Plastic, Polycarbonate, Polypropylene, Aluminium, Stainless Steel
Enviromental	: IP55
Pole Mounting Diameter	: 15-86 mm
Temperature	: -30°C to +55°C (-22°F to +131°F)
Wind Survival	: 160 km/hour
Mechanical Tilt	: ± 25°
Weight	: 1.8 Kg – single unit incl. package
Single Unit Retail Box	: 30 × 19 × 17 cm

www.citraweb.com

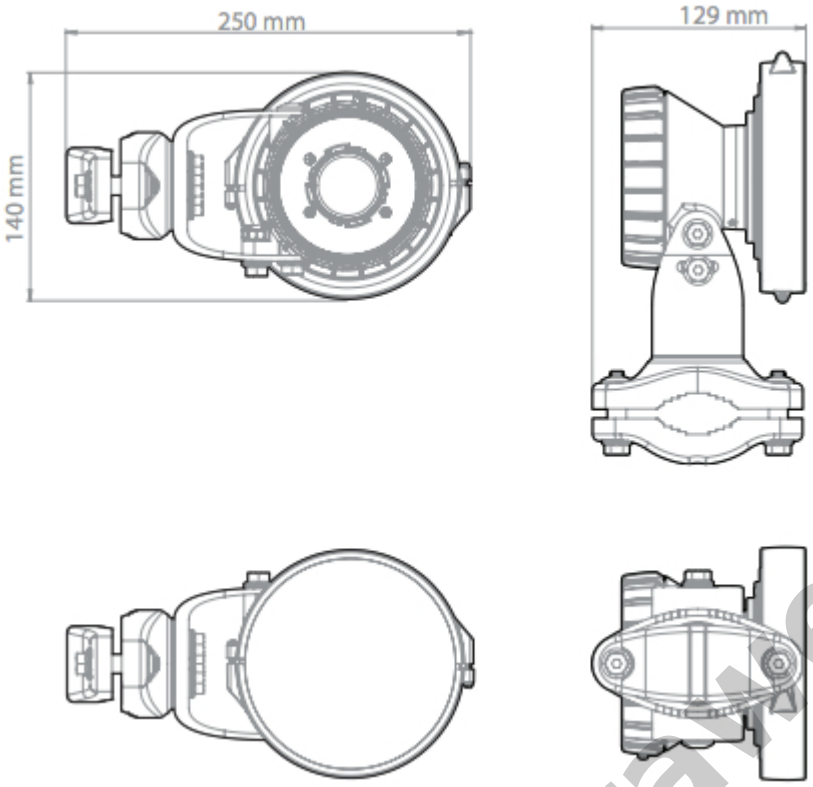

www.citraweb.com

PERFORMANCE	
Gain Max	: 11.5 dBi
Gain Typical	: 11.4 dBi
Azimuth Beam Width	: -3 dB H 50° / V 50°
Elevation Beam Width	: -3 dB H 50° / V 50°
Azimuth Beam Width	: -6 dB H 70° / V 70°
Elevation Beam Width	: -6 dB H 70° / V 70°
Front-to-Back Ratio	: 29 dB

* *Harga, spesifikasi, dan ketersediaan bisa berubah dan tidak mengikat*

URL : https://www.citraweb.com/produk/558/

Informasi lebih lanjut, pemesanan dan pembelian, hubungi: 0274-554444 atau email sales@citraweb.com