CITRAWEB SOLUSI TEKNOLOGI
www.citraweb.com
info@citraweb.com
sales@citraweb.com

StationBoxÂ® ALU Carrier Class 10N3E



Kode : StationBox-ALU-CC-10N3E
Brand : RF elements
Jenis : Wireless Antenna
Harga : Rp 445.000,00
~~Rp 800.000,00~~

StationBox® ALU Carrier Class 10N3E is IP65 rated outdoor enclosure for wireless platforms and access points.

Paket ini hanya Box only, Tidak termasuk Routerboard, Pigtails dan Antenna.
Tidak bisa digunakan untuk RB800.

Penawaran Harga Spesial
08112039555

StationBox® ALU Carrier Class 10N3E



Casted aluminium construction is covered with UV resistant paint and offers excellent weather resistance and improved RF noise protection.

www.citraweb.com

CITRAWEB SOLUSI TEKNOLOGI
www.citraweb.com
info@citraweb.com
sales@citraweb.com



Corrosion resistance is enhanced by using only high grade materials. Enclosure is made of casted aluminium and covered with UV resistant paint. All hardware is made of Stainless Steel. Body screws are captive, they do not fall out when released.



www.citraweb.com

Inner mounting plate is made of ABS and has premolded holes for installation of most used wireless platforms as MikroTik, Other devices of choice can be installed as well.

Compatible Wireless Platforms :
MikroTik RouterBoard : RB912, RB911, RB711, RB435, RB433, RB411
Ubiquiti Networks : RouterStation, RouterStation Pro
PC Engines : Alix2, Alix3, Alix6
Redwave : RW2458N

Other Manufacturers* : Simply drill the holes into plastic board and use suitable plastic spacers (sold separately)

PACKAGE CONTENTS :
StationBox® ALU CARRIER CLASS
Mounting Bracket
Base Plate
Alen Key 3-5mm
2x Hose Clamp
4x Screw with Wall Plug
Set of Screws

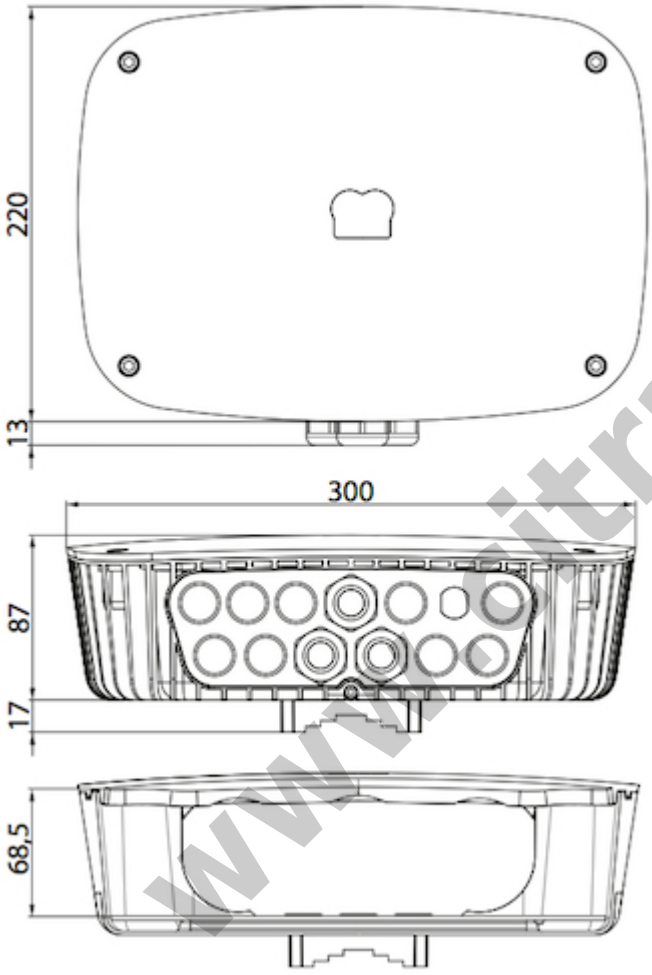

www.citraweb.com

* *Harga, spesifikasi, dan ketersediaan bisa berubah dan tidak mengikat*

URL : https://www.citraweb.com/produk/561/

Informasi lebih lanjut, pemesanan dan pembelian, hubungi: 0274-554444 atau email sales@citraweb.com