CITRAWEB SOLUSI TEKNOLOGI
www.citraweb.com
info@citraweb.com
sales@citraweb.com

TwistPort Adaptors TPA-RM5 RF ELEMENTS



Kode : TPA-RM5
Brand : RF elements
Jenis : Wireless Antenna
Harga : Rp 450.000,00
~~Rp 587.500,00~~

TwistPort Adaptors for Ubiquiti Networks Rocket radios enable integration with Rocket M5. The adaptor uses special coaxial connectors without threads, so the installation is effortless. Simply slide the radio into the adaptor until you hear “click”. To unlock, press the button and slide the radio out.

Paket ini hanya BOX Enclosure only, Tidak termasuk Antenna

Penawaran Harga Spesial
08112039555

TwistPort Adaptors TP-ADAPTOR-RM5



The TwistPort™ Adaptor for Rocket M5 makes the Rocket™ compatible with all TwistPort™ Antennas. TwistPort™ Adaptors are equipped with our original quick locking waveguide port. Connecting and disconnecting the Rocket™ M5 into the TwistPort™ Adaptor is very

www.citraweb.com

simple and requires no tools.



www.citraweb.com





COMPATIBLE WIRELESS PLATFORMS : RF elements® any Symmetrical Horn TP Antenna, any UltraDish™ TP Antenna Ubiquiti Networks™ Rocket™ M5

www.citraweb.com

TECHNICAL DATA	
Antenna Connection	: TwistPort™ - Quick Locking Waveguide Port
Radio Connection	: 2x Slide-On RP-SMA
Materials	: Insert - Aluminium Alloy Adaptor - UV stabilized and weather resistant ABS plastic
Flame Rating	: UL 94 HB
Temperature	: -40°C to +60°C (-40°F to +140°F)
Wind Survival	: 160 km/hour
Weight	: 0.5 Kg – single unit incl. package

Single Unit Retail Box	: Retail Box: 13 × 14 × 12 cm

PACKAGE CONTENTS : TwistPort™ Adaptor

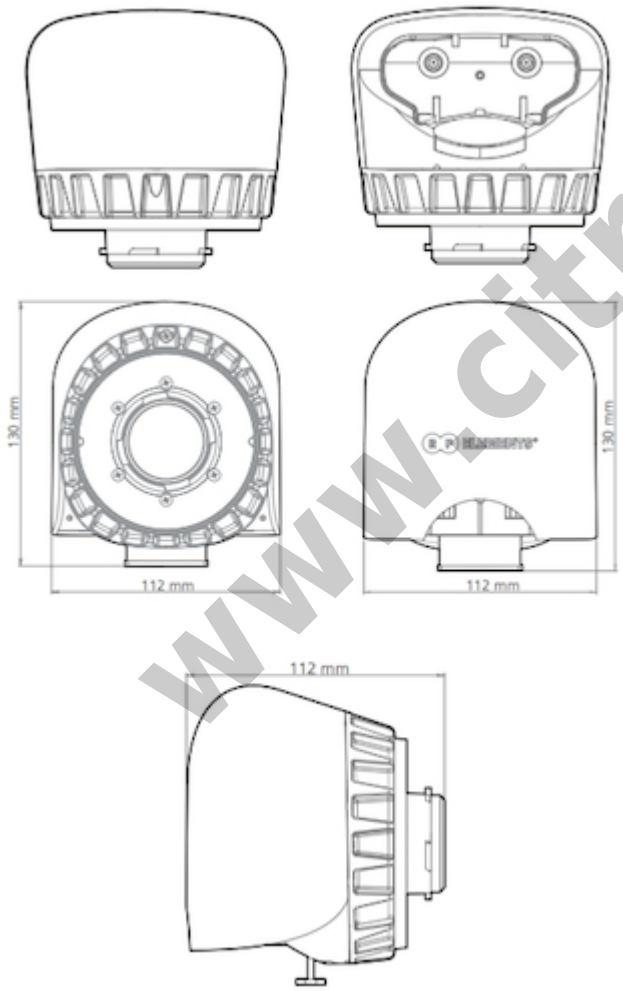

www.citraweb.com

** Harga, spesifikasi, dan ketersediaan bisa berubah dan tidak mengikat*

URL : https://www.citraweb.com/produk/577/

Informasi lebih lanjut, pemesanan dan pembelian, hubungi: 0274-554444 atau email sales@citraweb.com

www.citraweb.com