CITRAWEB SOLUSI TEKNOLOGI
www.citraweb.com
info@citraweb.com
sales@citraweb.com

StarterDish 21 UM Antennas 5Pack RF ELEMENTS



Kode : STD-21-UM-5PACK
Brand : RF elements
Jenis : Wireless Antenna
Harga : Rp 2.750.000,00
~~Rp 4.965.000,00~~

StarterDishTM UM Antennas - Parabolic dish antennas with a Waveguide connector.

Penawaran Harga Spesial
08112039555

Versatile CPE Antennas
StarterDishTM UM are parabolic dish antennas with high directivity designed for CPE deployment scenarios. The StarterDishTM UM is a convenient and affordable antenna series providing wide range of footprint, gain, and connectivity options.

Beam Performance
StarterDishTM UM antennas are designed for the best possible performance having minimized side lobes, enabling their deployment as CPE antennas in high interference environment.

www.citraweb.com

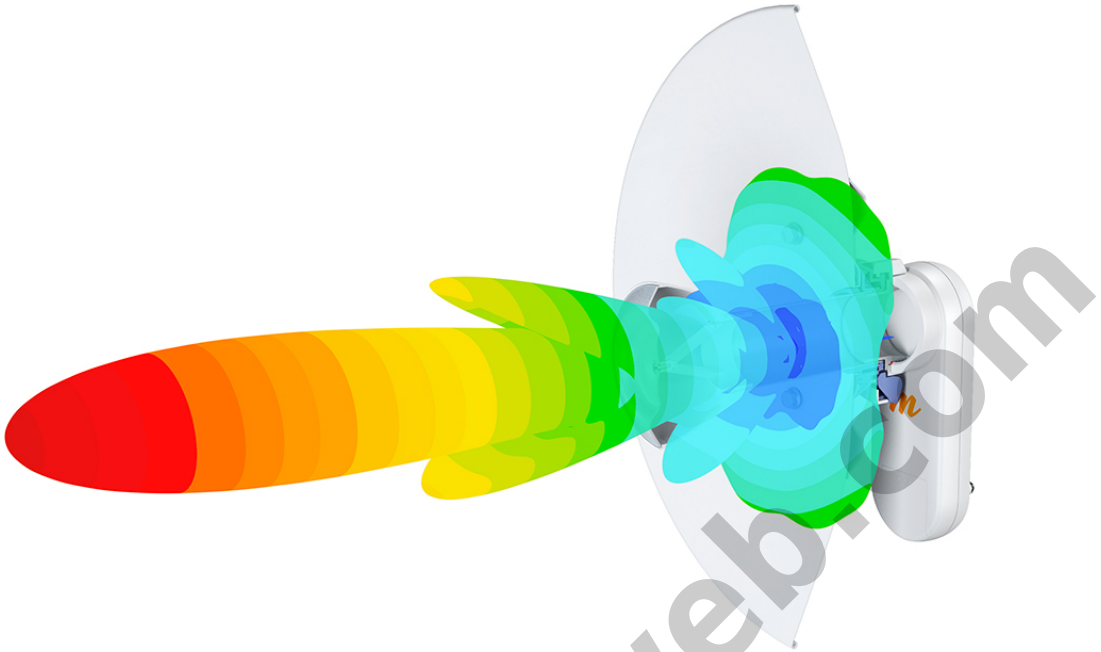

www.citraweb.com

Balanced Gain for Both Polarizations

StarterDishTM UM antennas provide stable gain performance over the whole working frequency band and both polarizations. Stable gain results in dependable field performance when changing radio channels.

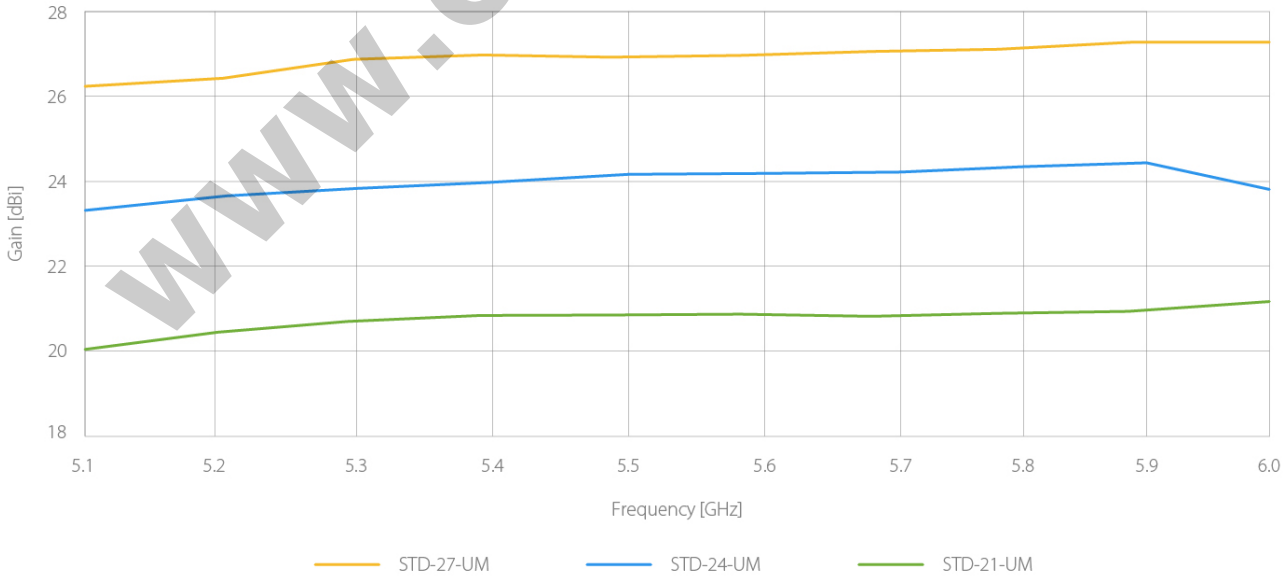

Flexible Radio Connectivity
The StarterDishTM UM antennas provide waveguide connection to Ubiquiti Networks waveguide connector and Mimosa waveguide connector straight out of the box. Separately sold StarterAdapterTM enables connectivity with any radio with coaxial interface. This adapter provides a pair of RP-SMA connectors and is not part of the StarterDishTM UM package.

Slick Pole Mount
StarterDishTM antennas come with integrated pole mount. It is simple, slick, and light weight. The range of pole diameters it supports is from 20 to 55 mm (the upper part of pole diameter range is recommended for the best results).

Light Weight
StarterDishTM antennas are very light. Low weight provides multiple benefits when installing CPEs in environment with few mounting options. Low weight is also a big plus for field technicians and installation teams.



www.citraweb.com

Cost-efficient Multi Packs

StarterDishTM UM Antennas come in cost-efficient five-packs to minimize shipping costs and packaging waste. Minimized amount of packaging elements saves time in workshop when preparing bulk deployments.



www.citraweb.com

Specifications :

Antenna Connection	Waveguide Port
Antenna Type	Parabolic Dish
Materials	UV Resistant ABS Plastic, Aluminium, Steel,
	Zinc Plated Steel & Stainless Steel Hardware
Enviromental	IP65
Pole Mounting Diameter	20-55 mm (recommend as close to 55 mm as possible)
Temperature	-35 °C to + 55 °C (-31 °F to + 131 °F)
Wind Survival	160 km/hour
Wind Loading	53 N at 160 km/hour
Mechanical Adjustment	± 15° Elevation

CITRAWEB SOLUSI TEKNOLOGI
www.citraweb.com
info@citraweb.com
sales@citraweb.com

Weight	1.2 kg / 2.6 lbs – single unit (one antenna)
	9 kg / 19.8 lbs – 5PACK (5 units) incl. package
Dimensions	Retail Box 5PACK: 695 x 447 x 110 mm
Gain	21 dBi
Frequency Range	5150 - 5950 MHz
Azimuth Beam Width -6 dB	H 15° / V 15°
Elevation Beam Width -6 dB	H 15° / V 15°
Azimuth Beam Width -3 dB	H 11° / V 11°
Elevation Beam Width -3 dB	H 11° / V 11°
Beam Efficiency*	28.00%
Front-to-Back Ratio (Min)	24 dB
COMPATIBLE WIRELESS PLATFORMS	
RF elements®	StarterAdapter™ SMA
Mimosa® by Airspan	C5x
Ubiquiti Networks®	PrismStation™ 5AC, IsoStation™ 5AC, IsoStation™ M5

www.citraweb.com

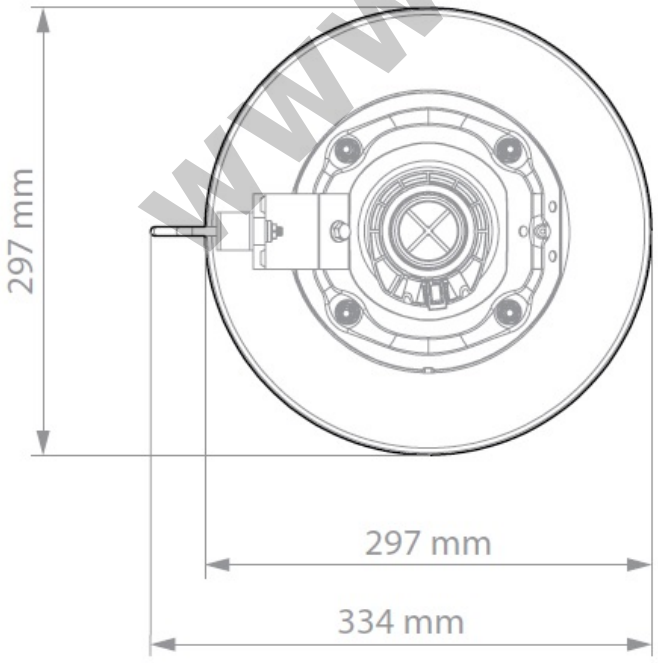

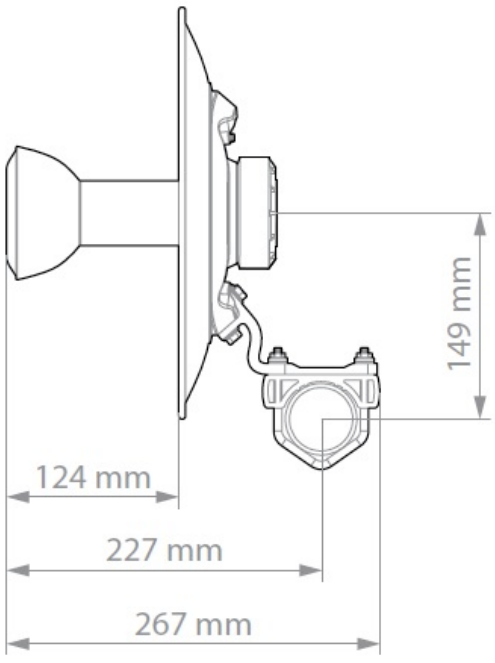

Download DataSheet

Download UserGuide

** Harga, spesifikasi, dan ketersediaan bisa berubah dan tidak mengikat*

URL : https://www.citraweb.com/produk/877/

Informasi lebih lanjut, pemesanan dan pembelian, hubungi: 0274-554444 atau email sales@citraweb.com

www.citraweb.com