CITRAWEB SOLUSI TEKNOLOGI
www.citraweb.com
info@citraweb.com
sales@citraweb.com

TwistPort Adaptor for ePMP 2000 AP RF ELEMENTS



Kode : TP-ADAP-e2K
Brand : RF elements
Jenis : Wireless Antenna
Harga : Rp 380.000,00
~~Rp 650.000,00~~

TwistPort™ Adaptor for ePMP 2000 is compatible with Cambium Networks™ ePMP 2000 AP radio and ePMP Force 400C radio.

TwistPort™ Adaptors cover an ultra-wideband spectrum of 5180-6400 MHz and perform with superb efficiency with very well managed VSWR across the spectrum.

***Not include radio and antenna**

Penawaran Harga Spesial
08112039555

What is TwistPortTM Adaptor

TwistPortTM Adaptor adapts 3rd party radios to RF elements® proprietary TwistPortTM waveguide connector. Integration of the radio is smooth and requires no tools. Making 3rd party radios compatible with TwistPortTM allows for using the radio with any TwistPortTM antenna ever made and enable superior performance, noise immunity and network scalability.

For ePMP 2000 and ePMP Force 400C radio

TwistPortTM Adaptor for ePMP 2000 is compatible with Cambium NetworksTM ePMP 2000 AP radio and ePMP Force 400C radio.

www.citraweb.com



www.citraweb.com

Market Leading Performance

TwistPortTM Adaptors cover an ultra-wideband spectrum of 5180-6400 MHz and perform with superb efficiency and great VSWR.

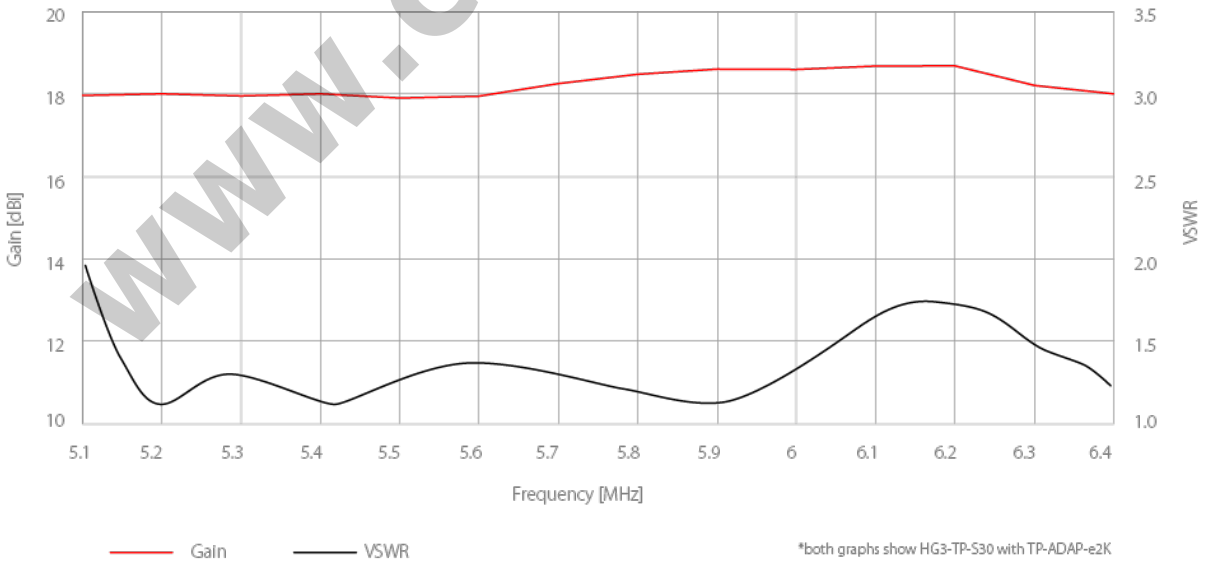

Specifications :

Antenna Connection	TwistPort™ - Quick Locking Waveguide Port
Radio Connection	2x Slide-On RP-SMA
Materials	Insert - Aluminium Alloy
	Adaptor - UV stabilized and weather resistant ABS plastic
Flame Rating	UL 94 HB
Temperature	-40°C to +60°C (-40°F to +140°F)
Wind Survival	160 km/h
Weight	0.4 Kg / 0.9 lbs – single unit
	0.5 Kg / 1.1 lbs – single unit incl. package
	11.2 Kg / 24.7 lbs – carton (20 units)
Single Unit	Retail Box: 13 × 12 × 13.5 cm
Frequency Range	5180 - 6400 MHz
Polarization	Dual Linear H + V
VSWR Max	1.8
Impedance	50 Ohm
COMPATIBLE WIRELESS PLATFORMS	
RF elements®	any TwistPort™ Antenna
Cambium Networks™	ePMP™ 2000 AP, ePMP™ Force 400C

www.citraweb.com

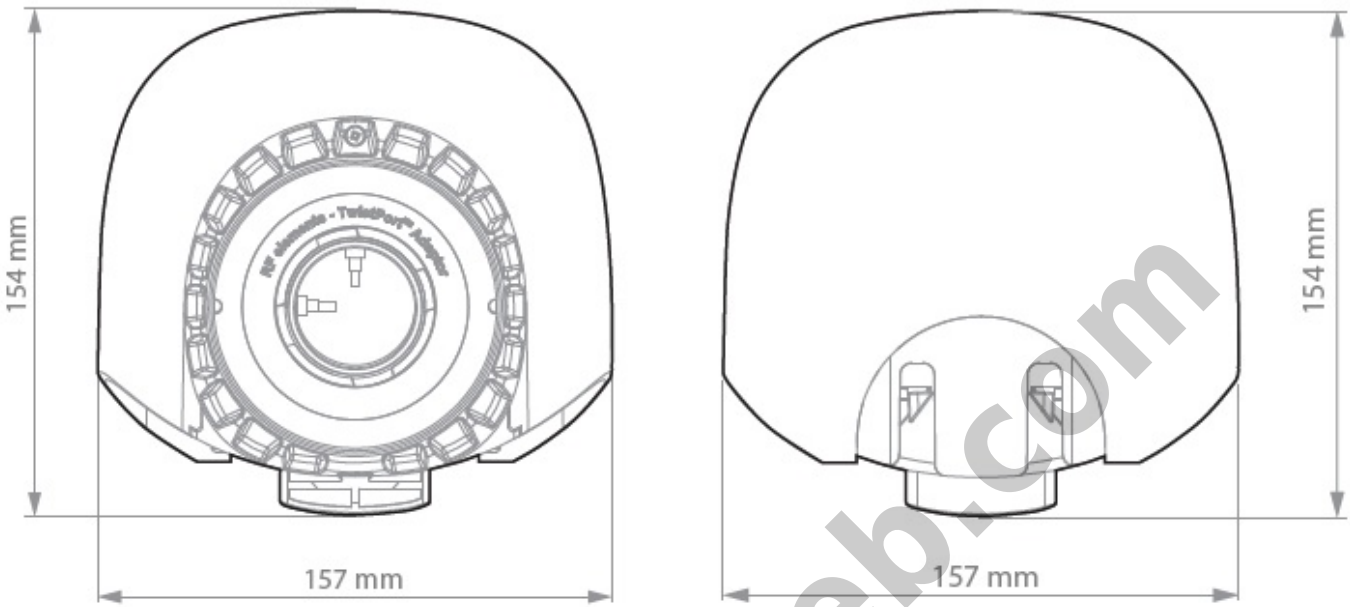

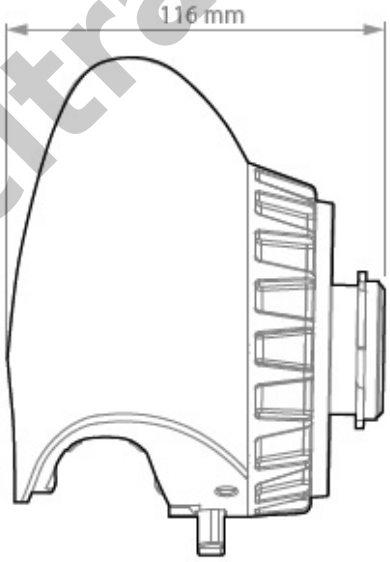

www.citraweb.com

Download DataSheet

Download UserGuide

** Harga, spesifikasi, dan ketersediaan bisa berubah dan tidak mengikat*

URL : https://www.citraweb.com/produk/883/

Informasi lebih lanjut, pemesanan dan pembelian, hubungi: 0274-554444 atau email sales@citraweb.com